# CanDig Model CD11, CD21, and "Mining CD21"

# Owner's Manual

MANUFACTURED BY/FABRIQUE:
CanDig Mini Excavators Inc.
D-825 Laval Crescent
Kamloops, B.C. Canada V2C 5P2
TYPE: CanDig DATE: JFMAMJJASOND 13 14 15 16
MODEL: "CD11" "CD21" "Mining CD21" "CD21R"
GVWR/PNBE (kg) 350 kg 545 kg
VIN/NIV: 2C9CD2117D1195046

| GAWR/PNBE | TIRE/PNEU | RIM/JANTE | COLD INFL. PRESS/PRESS DE GONFL A FROID PSI/LPC/KPA |
|---|---|---|---|
| 998 kg | ST175/80D13 | 13"X5 bolt = 5 on 4 1/2 | 35 psi/240 kpa |

ORIGINALLY PURCHASED BY: Your Name, or company name here

Honda Serial Number: GCBPT-1208683

…..your affordable alternative to back-breaking labor

that's diverse, portable, safe, fun and easy!

# Contents Page #

# Environmentally Friendly Facts

* The "Mining CD21" uses only 2 gallons of gas in 8 hours of operation.

* Less helicopter transport time required since the "Mining CD21" weighs only 1,250 pounds, and can be quickly/easily transported in one load, or two loads of 750 + 500 pounds.

* CanDig crawls itself along steep slopes and through tightly spaced trees, from one trench to another. Tracked excavators often require roads or "steps" to be constructed, but CanDig walks over the same ground without a trace.

* No special permitting needed to use this trenching equipment because of its low impact on the environment.

* Requires very low maintenance…..daily greasing, change the hydraulic filter once a year, and occasional engine oil change.

* CanDig Inc. has a policy of using its recycled metal in secondary business ventures.

# While Waiting For Your Delivery

Now that you have placed your order for your new CanDig mini excavator, you should expect the following things to happen:

1. You will be given a guaranteed delivery date and tracking number.
2. Your 17 digit (internationally recognized) serial number will be issued.
3. For customers located outside of North America, you will receive shipping documents in the mail which you will need to claim your shipment at the port of entry of your country. Note that CanDig Inc. provides all of the documentation that you will require in order to ensure fast and trouble-free clearance at the port of entry into your country.
4. In order to reduce your shipping costs, it is important that the shipment is not classified as "dangerous cargo". We have overcome this concern by shipping all CanDig products without fluids installed. In order to save you a great deal of money on shipping, we ask that you have the following fluids on hand in anticipation of receiving your new excavator: 5 gallons of hydraulic fluid (32 weight for countries that have seasonal temperature differences, or 40 weight for countries with year-round warm weather) Note that hydraulic fluid can be purchased at any hardware store in your area; 1 liter of 30 weight Honda engine oil, which is available from any Honda dealer; regular (unmixed) gasoline, although it is recommended that you choose a high grade gas which runs cleaner when hot/cold.

## General Safety Rules

**SAFETY IS A COMBINATION OF OPERATOR COMMON SENSE AND ALERTNESS AT ALL TIMES WHEN THE UNIT IS BEING USED.**

## Warning!

For your own safety read this Operator's Manual before operating CanDig. Failure to follow the safety rules listed below and other basic safety precautions may result in serious personal injury or death.

## Work Area

1. Keep children away. All visitors should be kept a safe distance from work area.

2. CanDig should be re-configured only on level surfaces. It has no brakes and can easily roll away out of control. Once re-configured for digging, it becomes much more stable and can be used on uneven surfaces.

3. Check with the local city authorities to determine if there are buried natural gas lines or electrical cables buried where you intend to dig.

4. Do not operate CanDig on a slope of more than 35 degree slope. When on slopes, be sure the digging end is always facing the upper side of the slope.

5. Don't force CanDig. When you encounter a difficult object, work it slowly by placing the bucket teeth in front, then rocking it until it breaks loose. Alternatively, try digging around the object first to try to loosen it more.

6. Never leave the unit running while unattended.

7. Don't use in a dangerous environment. Know your own limits and work within them.

8. Do not operate in a confined area. Remember that the unit runs on gasoline and that the fumes given off can cause sickness and death.

## Personal Safety

1. Wear proper apparel. No loose clothing, neckties, rings, bracelets, or other jewelry to get caught in moving parts. Although precautions have been built into your CanDig around the pump/motor area, be especially careful where moving parts can cause a hazard. Non-slip footwear is recommended.

2. Don't overreact. Keep proper footing and balance at all times.

3. Never stand while operating CanDig.

4. Check for and repair damaged parts before further use of the unit.

5. Don't operate CanDig when you feel tired.

## Warning!

*Always lower hydraulic attachments (such as the boom/bucket) to the ground before leaving the machine unattended.

*If cylinders are to be removed, first be sure the attachment is resting on the ground, and turn off the engine.

*Before disconnecting hydraulic hoses, relieve pressure in the system by pushing the valve lever forward/backward a few times with the engine shut off. This prevents hydraulic fluid from squirting when fittings are loosened to that cylinder.

*On the left side of floor, the operator needs to use caution not to get his foot caught between the frame and the boom pivot cylinder. Under no circumstances should an operator allow a child to sit on CanDig while operating. Children's feet are smaller and can get pinched in this area.

*Drop the boom slowly to prevent being jolted forward.

*Use extreme caution when working in confined areas so that you do not damage surrounding structures while swinging the boom to one side.

*Some (special order) models have the option of being able to tow in a narrow configuration behind a quad, or wider for the highway. Please ensure that you always choose to use the wide option for highway travel, or even for towing behind a quad when possible since it provides more lateral stability and is less likely to tip over when cornering or on uneven ground. Use the narrow towing option only when safe to do so.

## Assembly

Your CanDig Mini Excavator comes complete, either assembled or partially assembled on a pallet. If some assembly is required, follow the following procedures:

1. Remove the parts from the pallet.

2. Mount the wheels/tires to the stubs. (If you have hydraulic stabilizers, slip the housing which holds the stabilizers and cylinder over the axle before sliding/pinning the axle in position.) Be sure to securely snug the lug nuts in place so that they do not come loose during transporting on the highway. Note that the picture below shows the new axles that are shaped like a "dog's leg" so that they can be pinned in four different positions. Below, they are reaching towards the tow end, providing safer tongue weight and greater stability for towing.


Old style (straight) axles shown below:

3. Lift one side of the main frame assembly, propping it up so that the wheel axles can be mounted. Next, mount one wheel at the digging end of the excavator. Use ½ inch pins to secure them in place. Again, snug the lug nuts tight. Be sure the fender gussets (if included) are facing upwards. Repeat the process to mount the second wheel.

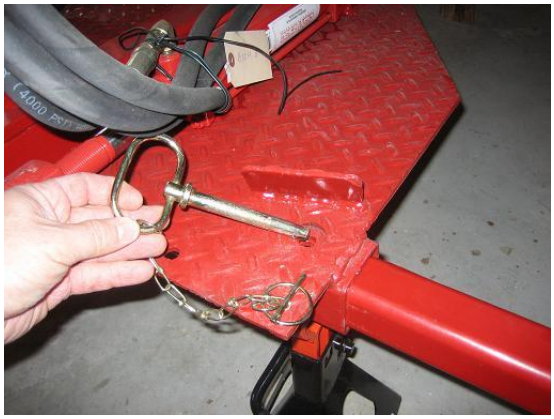

4. Insert the vertical tongue support post through the tongue end of the excavator (sometimes equipped with a winch on top), and secure in place with a ½ inch pin. Note that the actual wheel has now been removed intentionally from the balance bar. Without it, the excavator has more clearance for towing, won't roll away unintentionally while in trailer mode, and it really never was used (like a tricycle) to move the excavator short distances since the operator naturally chooses to pick up the hitch end to gain more leverage. Therefore, the actual steel wheel has now been removed. The following picture shows the two options for the tow hitch (model CD21 only). Pin the tow bar into the top "working" sleeve for working; and pin into the bottom "towing" sleeve for towing. Note winch shown for model "Mining CD21" only. Winch can also be positioned in front of the main control valve, facing either side to stabilize "Mining CD21" on side hills. Note also there is a "dirt plug" that fits into the lower towing sleeve to prevent dirt from packing into the sleeve when backing up; and it is stored in the upper sleeve when towing.

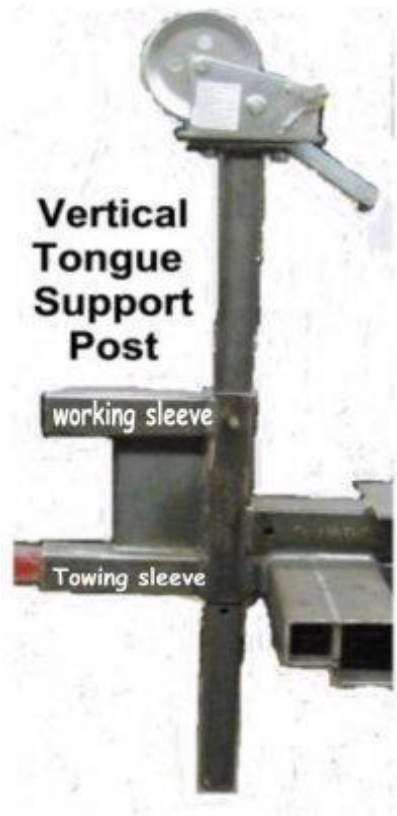


5. Install the fenders by inserting the ¼ inch pins. New style fenders are made of light-weight plastic, and are more durable that the metal ones shown. Metal ones were discontinued when they consistently rattled and spot welds broke.


6. Insert the tongue into the "towing end" of the excavator and use two ½ inch pin to secure it into place. Then, switch the "dirt plug" to the upper sleeve for storage.

7. The mechanical stabilizer legs come in two parts; the "arms" and "legs". Assemble each using ½ inch pins, then insert them in their holding brackets facing upwards so that they are ready for highway travel.



Optional hydraulic stabilizers simply slide over the axles. They do not require pinning or bolting to the axle.

8. Attach the swing to the frame using the 1" or 1 ¼" grade 8 bolt. (this is usually done for you).
9. Bolt the boom to the swing using the 1 inch grade 8 bolt provided.

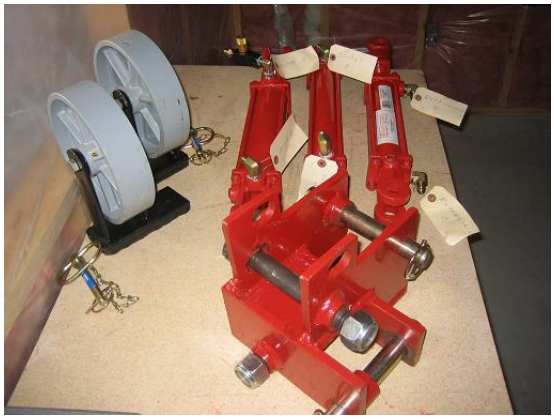
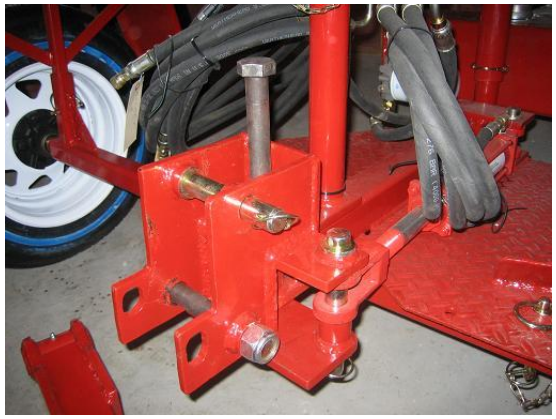

a. Hydraulic hoses, labeled for your convenience, need to be attached to the corresponding ports of the cylinders for the boom, extension and bucket. Tighten snuggly, but do not over-tighten because that can damage the threads. Note that the swing cylinder (located near the left foot of the

operator when seated on the excavator) already has the hydraulic hoses attached.

The picture below shows how hoses should be routed.


b. Use multi-purpose straps to ensure hoses will not be pinched or rub on the frame. Remember that CanDig is not allowed to send dangerous materials, so it is up to the owner to supply and install standard 32 weight hydraulic fluid (5 gallons). Also, the Honda motor needs to have nearly one liter of 30 weight oil installed. Remember that it runs on regular unmixed gasoline. It is recommended that you use premium gasoline so that the unit gives you better performance under all conditions.


This picture shows routing of hydraulic hoses and wiring for travel lights for the model CD21. Note that your light wiring may be shorter, and therefore does not need to be looped up to the top of the boom extension.

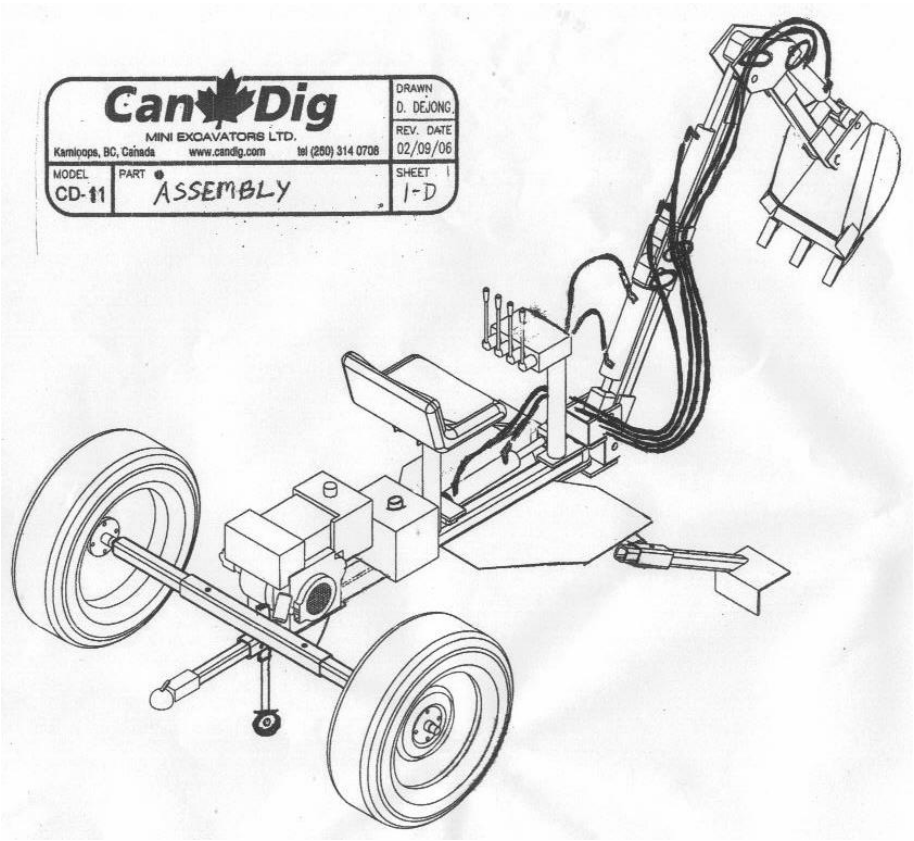

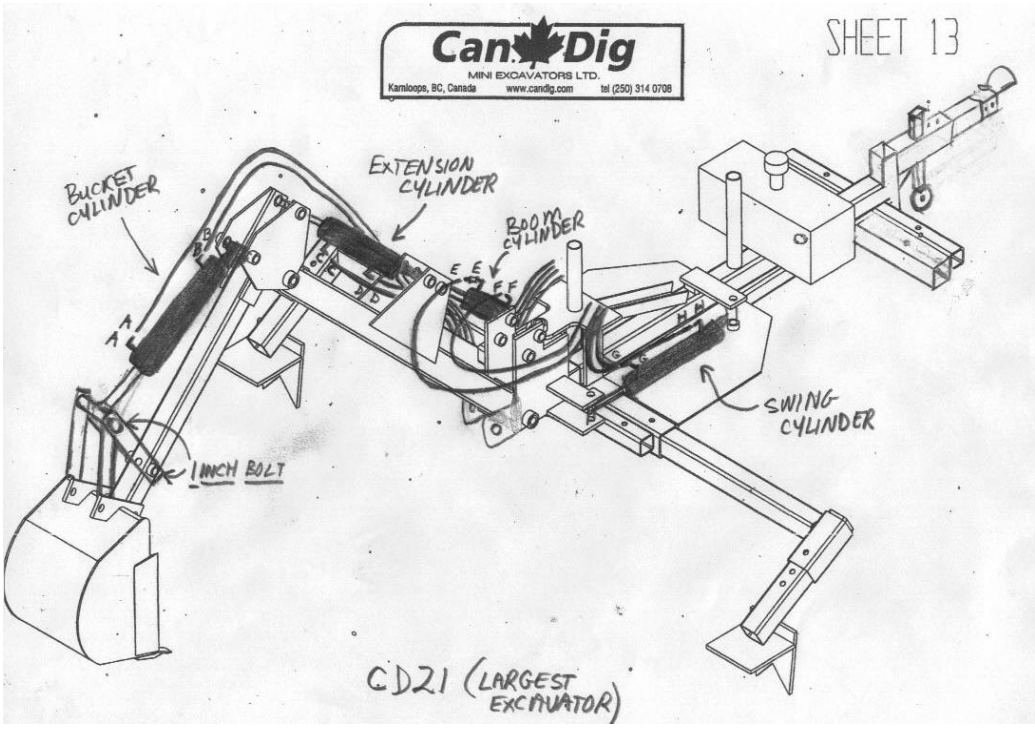


Note that your excavator (depending on when it was built) may have an angled boom (rather than straight). The angled boom digs deeper and performs better overall.

## Re-Configuring CD11 & CD21 & Mining CD21

Towable models should be detached from the tow vehicle and re-configured to work independently. Do not use the tow vehicle as an anchor because when digging that may cause too much stress on the axles, and probably bend them. Before operating CanDig, remember to remove the 1 inch safety travel pin from below the boom. Note that this safety pin is an added security so that your boom will not "weep" down causing a dangerous situation while it is being transported. Store the 1 inch safety pin in your tool box, or other convenient location.

1. Be sure that CanDig is on level ground before detaching it from the vehicle. When it is in the travel mode, the stabilizer legs are upright, therefore cannot hold the unit in place. It can simply roll away if it is not on level ground. Remember that the unit is especially vulnerable to this problem while it is in the "trailer/travel" mode since it is not equipped with brakes

2. Lower the vertical tongue support post so that you can detach the unit and have the excavator in a level position. It is important that the post is down like this so that the following procedures can be performed properly.

3. On level ground, detach CanDig from the 2 inch trailer hitch. Move your vehicle away from CanDig so that you have room to perform the following procedures.

4. Start the Honda motor then raise the boom slightly so that the 1 inch safety travel pin can be removed from below the boom. Remove the safety pin.

5. Sitting on the seat of the excavator, move the boom around to one side, then extend the boom extension all the way out, adjust the bucket teeth so they are extended away from you. Next, use the boom down lever to place the bucket down to the ground and raise that side of the excavator so that the wheel is clear off the ground.

6. Remove both stabilizer arms/legs (together) and place them on the ground on opposite end and side of the excavator so they can later be placed in the downward position on the digging end.

2012 "Mining CD21" models now have multi-positioning options for stabilizer arms and axles to provide more options on uneven ground. Here, they are shown in the towing mode, facing upwards.

7. Remove the axle (with wheel) and pin it on the other end, directly in front on same side. The wheel axle, when positioned for towing should be facing towards the digging end to provide safe tongue support for towing. When the wheel axle is positioned at the towing end (for digging), it can be positioned either facing up, down or back towards the tow end, depending on ground slope it's working on.

8. Pin the first stabilizer leg on so that is in the stabilizing position. Choose to have the arm facing up on both sides when climbing a hill; both down if you need to come down a gentle slope; or one up and one down if working on a side slope. Note that it is always more stable to have the digging end of the excavator facing up the slope. Allow the boom to raise so that the weight comes down on the wheel and stabilizer leg.

9. Sitting on the seat of the excavator, swing the boom around to the other side and repeat the steps for number 7 and 8 above.

10. Finally, raise the vertical tongue support up out of the way. CanDig is now ready to work independently. Note that the towing tongue may be removed, or stored in the upper sleeve to provide greater mobility without possibly dragging the hitch on the ground. (Reverse these procedures when getting CanDig ready for highway travel.)

## CanDig Care

1. Maintain your Honda motor as specified in the dealer's manual provided.

2. Keep hydraulic fluid clean. "Bleed" the line if you ever need to replace a cylinder or broken line. This can be done by re-connecting the line to the new cylinder loosely, then operating the control lever to that cylinder until fluid flows from the loose connection. Then, tighten the connection.

3. Do not alter or misuse the unit. CanDig is built to precision and any alteration or modification not specified is misuse and may result in dangerous conditions.

4. Do not increase the system pressure. It is pre-set at 2100 psi for all models. Under no circumstances should the pressure exceed 2100 psi. If you increase the system pressure greater than 2100 psi, it will deliver so much force that the excavator parts can easily be damaged, especially the pump and welded members, and the warrantee will be void.

5. There are grease nipples to be greased at least once daily. Refer to diagram…

## GREASE POINT AND CYLINDER IDENTIFICATION

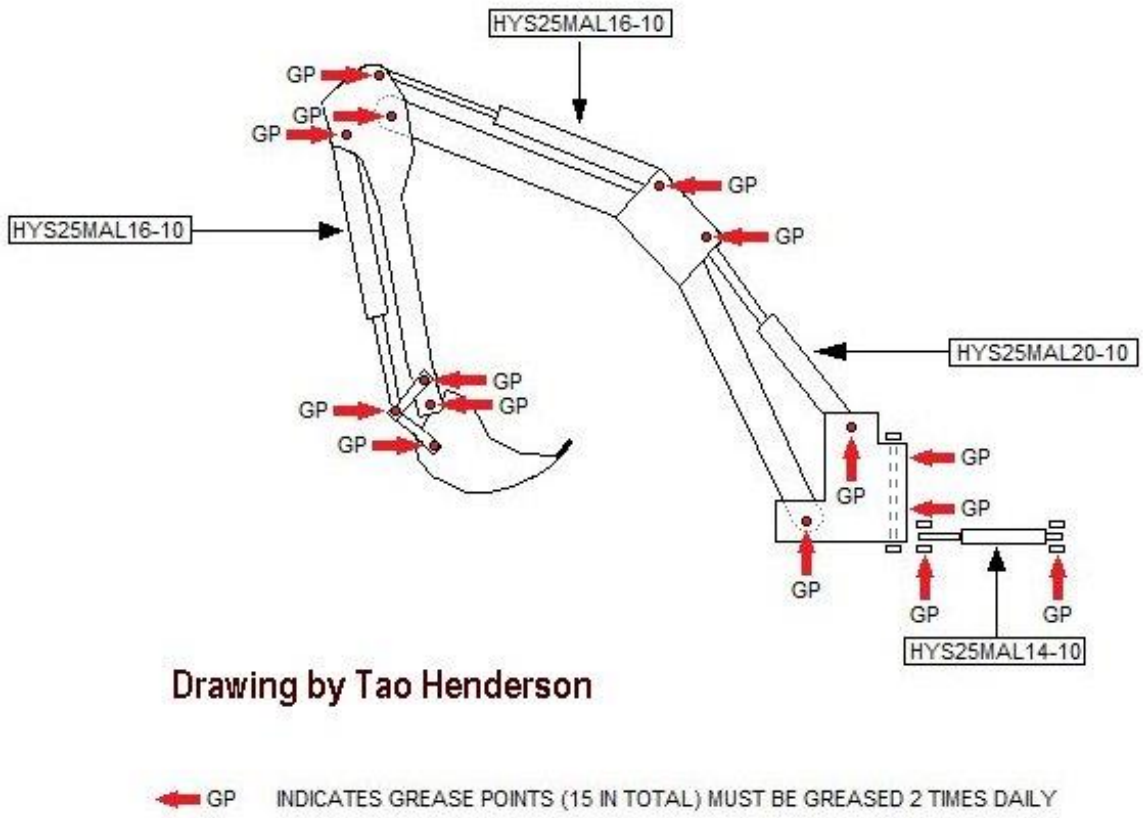


6. One inch bolts are used to hold the cylinders and bucket in place. For your convenience, you are also provided with two 1 ½ inch jumbo wrenches to remove the bolts easily.

7. Periodically, be sure the level of the hydraulic fluid is up to a level which is about midway up the strainer. Note that low or dirty fluid can cause everything from slow cylinder operation to pump failure. Check the hydraulic fluid level with the engine off and fluid cool. Note that in temperate climates, the hydraulic fluid should be 32 weight, and that it never needs to be changed, but be sure it is kept clean by changing the filter as needed.

8. It is recommended that the hydraulic filter be changed for the first time after about 20 hours of use. Change the hydraulic filter once or twice annually thereafter (Donaldson P551551, or equivalent). It is recommended that more frequent changes be made if working in extremely dusty conditions.

9. Be sure to use unmixed gasoline. Regular gas is okay, but it is recommended that you choose a high grade gas because it will allow your Honda engine to perform cleaner in hot/cold conditions.

10. In temperate climates, it is recommended that you store your excavator for winter months as follows: Change the engine oil. Fill the gas tank, including putting some gas stabilizer in your gas tank in order to prevent condensation from building up in the tank during the winter. Next, start the engine and shut the gas supply line off so that the lines are left clear. Run the engine until all the gas in the line is used up. Cover your excavator so that it is protected from the elements.

11. After several years of use, you may want to replace the bushings if you notice excessive looseness at the joints. Note that all joints are held together using grade 8 steel bolts. This is because the high quality steel in the bolts does not wear quickly, and so that they can be removed easily in order to replace the bushings. In order to replace the bushings, CanDig Inc. can supply you with new bushing material. Remove the old bushings by inserting the blade of a hacksaw and cutting two times, making it easy to pound out first a small amount using a punch and hammer, then the rest of the bushing will be easy to remove. Apply grease to the outside and inside of the new bushing, then tap them into place using a block of wood to pound against so as not to distort the form of the bushing. You may need a grinder to "clean up" the ends of the new bushings so they are flush with each side.

12. Check condition of welds, especially after several years use, to ensure that they are in good condition. Repair as needed to ensure safety. You may reinforce areas that are showing signs of metal fatigue so those areas don't fail when using the excavator for next season.

13. For models capable of rotating (CD11R or CD21R), re-lubricate the raceways and gear together with inspection of the fastening bolts and wear of the bearing. PSL slew rings are filled with grease "LV2EP". For the gear, apply Esso brand "EP GREASE 350" or Castrol brand "Viscogen 0" frequently as needed. Also for the CD11R or CD21R, "feather" the rotating control to prevent damaging the motor with sudden starts/stops.

## Towing on highway and with helicoper

Once the throttle has been set, it is usually good for the rest of the day. Use a 2 inch trailer ball to tow on highway. For helicopter transport, the ideal straps lengths are 2 x 10 feet (attached around the back axles while in the working mode); and 1 x 5 feet (attached around the top elbow of the boom/extension).

## Movement:

1. Operate CanDig at about ¾ to full throttle. Always keep the bucket end of the excavator on the upward side of the slope for best stability, whether traveling up or down a slope.

2. To move forward, reach out with the boom extension, place the bucket on the ground, teeth facing forwards, and lift the stabilizer legs off the ground. Use the boom extension control to move the excavator forward, then gently allow the boom to be raised. Repeat this process over and over until you have moved forward to where you need to be.

3. Reverse the process for number 1 above to move backward.

4. To move to the side, or to steer, reach to one side of the excavator with the boom, place the bucket on the ground and lift the stabilizer legs off the ground. Use the pivot control to swing you around to the side you wish.

5. Note that you can maneuver your way around obstacles by using the movement procedures shown above in various combinations.

6. Note that if you are backing down a slope, and one of the tires needs to go up and over an obstacle like a stump/rock, you can operate the extension backwards like always, adding a slight twist to one side or other using the swing control.

7. **Important:** When traveling on extreme slopes, always be ready to pull the boom lever towards you if the excavator becomes unstable. This will allow the stabilizer legs to grab the ground, providing the safest stability.

## Digging:

**Important:** For safety and stability, always dig with the bucket end of the excavator facing up the slope.

1. Reach out with the boom, and with the bucket teeth facing slightly towards you, lower the boom and pull the bucket back towards you with the boom extension. Try to carve off only a few inches at a time, with the teeth cutting into the ground at the best angle so that CanDig will dig well for you. If you have too big of a bite into the earth, or if there is too much resistance, allow the boom to come up slightly or angle the teeth so that they are cutting into the earth better. Pull and hold the extension lever while tapping the boom lever towards you as the bucket digs into the ground. (Practice with this will improve your skills and you will be delighted with the digging performance of CanDig.)

2. With the bucket full, curl the bucket back so the earth can be lifted upwards using the boom, then away from the hole by swinging the boom in the direction you need. It is safest to swing towards the upside of a slope. Note that CanDig will lift

a heavier load as the boom extension is moved in closer to the operator (rather than attempting to lift while the boom is fully extended).

3. If you need to dig a trench deeper, you can re-position the excavator forward over what you've already dug, so that you are digging more directly underneath. Take care that the stabilizer feet do not slip towards the trench opening. If you're working on an angle to the slope, choose to pick the stabilizers up by forcing the bucket down on the lower side of the trench. Dump your load on the upper side of the trench is preferred for stability.

4. Backfilling is best done by digging the loose dirt, lifting it, and swinging it into the hole. It is okay to use the bucket to sweep the small remaining bit of ground, but do not rely on this sort of action since it is will cause premature wear of the bushings at the joints. To tamp the earth, force the bucket firmly onto the earth by lowering the boom and lifting the excavator off the ground for a moment.

5. Note that CanDig can work slightly closer to a building by unpinning, sliding the stabilizer on one side in more, then re-pinning it.

6. Also note that CanDig can be quickly and easily re-configured to work on uneven surfaces by re-pinning the stabilizer legs/arms and axles to suit the slope you are working on.

# Accessories:


Mining CD21 shown with hydraulic thumb (as well as access wheels, trenching bucket/ripper root cutter)

shown with thumb, fenders, lights, with trenching bucket and ripper mounted.


Access wheels make your excavator 28 inches wide.

Lights and fenders are required for highway travel. Note that the lights meet safety standards for all countries, and have been awarded the CE declaration of conformity as well as the National Safety mark, however, some slight modifications may be needed with lights and fenders for the European community. Note that the red light shown in the middle is no longer required, and therefore is no longer included. At the back, the side marker is amber, and the signals/brakes are red and the license plate light is white. Note also that the heavy metal fenders have now been replaced with lighter plastic ones. In addition to reducing the weight, the new fenders are also superior since they do not rattle and generally last much longer that the welded metal version.


For mining, the 4 inch auger is preferred to the 3" we tried to start with since it uses a much stronger steel spine to construct the auger. Auger bits and extensions come in 3 foot lengths. Augers can also be 6 inch or 8 inch.

Auger Operating Tips

Raise the boom. Curl the bucket in fully. Slowly lower the boom until the auger touches the ground. Apply a small amount of down force to the auger. Too much down force can stall the hydraulic motor. Drill down a short way, then lift the auger out of the hole. Repeat this process 6 to 8 times as you drill down 3 feet.

To move to next hole location, unclip the auger bit. Fully extend the bucket and reach out so that you can pull yourself forward, or reverse that action to push yourself backwards. Be careful that the hydraulic hoses don't catch on things.


The vertical support post is shown in its lowered position so that it acts as a "balance point" when changing the excavator from travel mode to work mode, or visa versa. Raise the post so the winch can be used to stabilize toward the back. Warning: The winch is not intended to provide sufficient support to withstand extensive digging resistance. The cable could break, causing serious injury to the operator. Note that the post can be removed, then rotated 90 degrees in either direction, then placed in the support column behind the hydraulic tank so that it can provide stability on uneven ground when digging.

Note that the winch can also be positioned in the sleeve in front of the operator's controls, facing either side, in order to offer added side support when digging on side slopes.

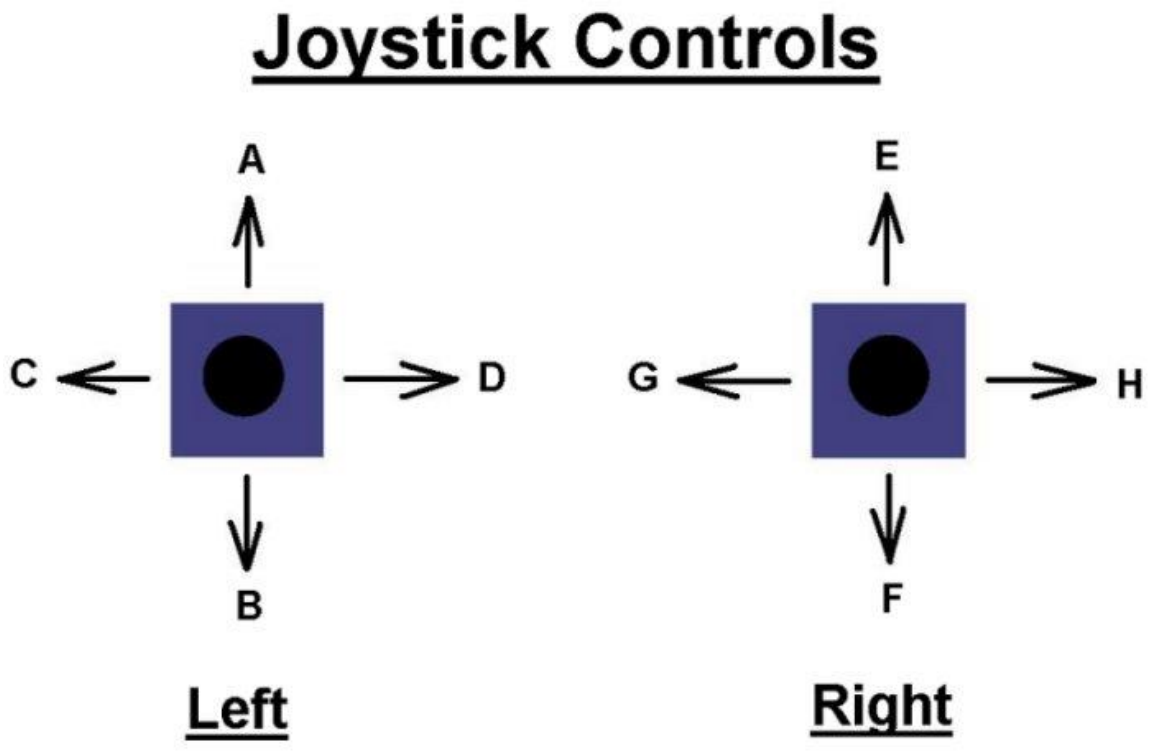


Note that joysticks are an option, but highly discouraged since they contain many intricate parts that can (and have) broken, leaving the excavator in need of repair. The basic lever controlled valve that is included free with the excavator is easy to operate, and much more reliable.

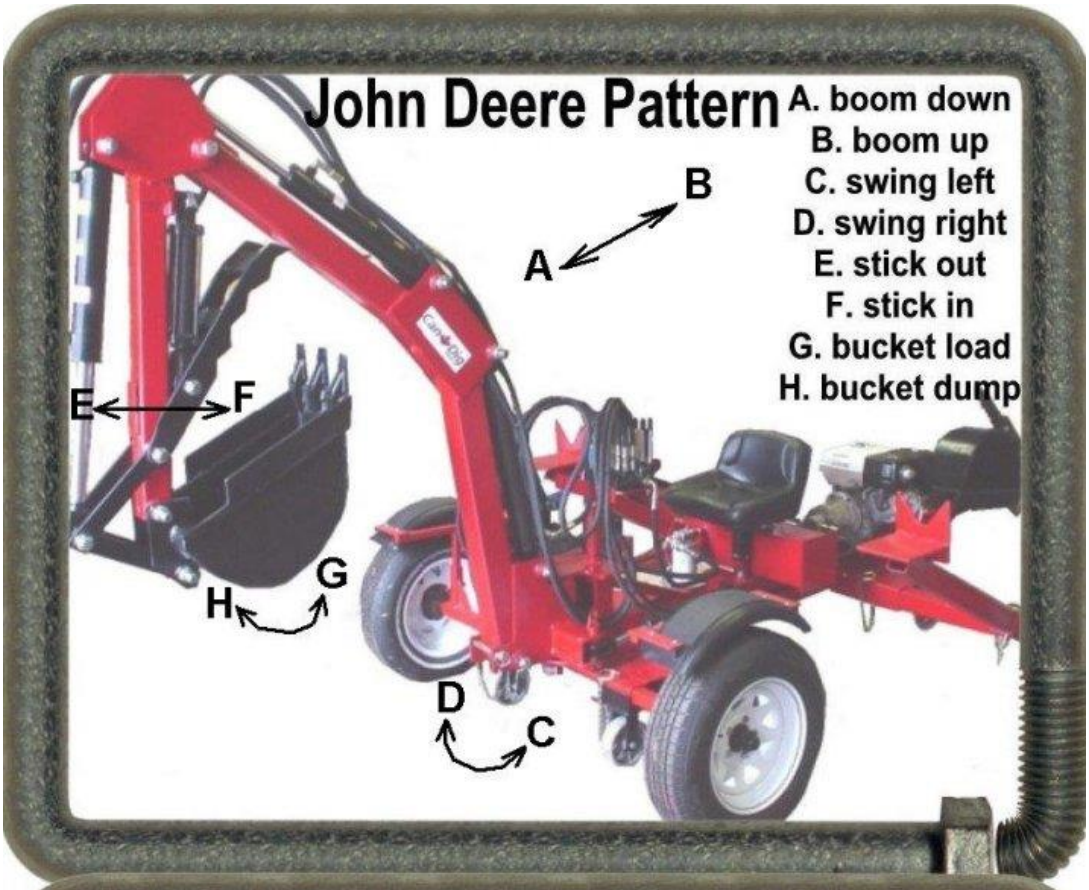
John Deere Pattern
A. boom down
B. boom up
C. swing left
D. swing right
E. stick out
F. stick in
G. bucket load
H. bucket dump
A
B
E
F
G
H
D
C

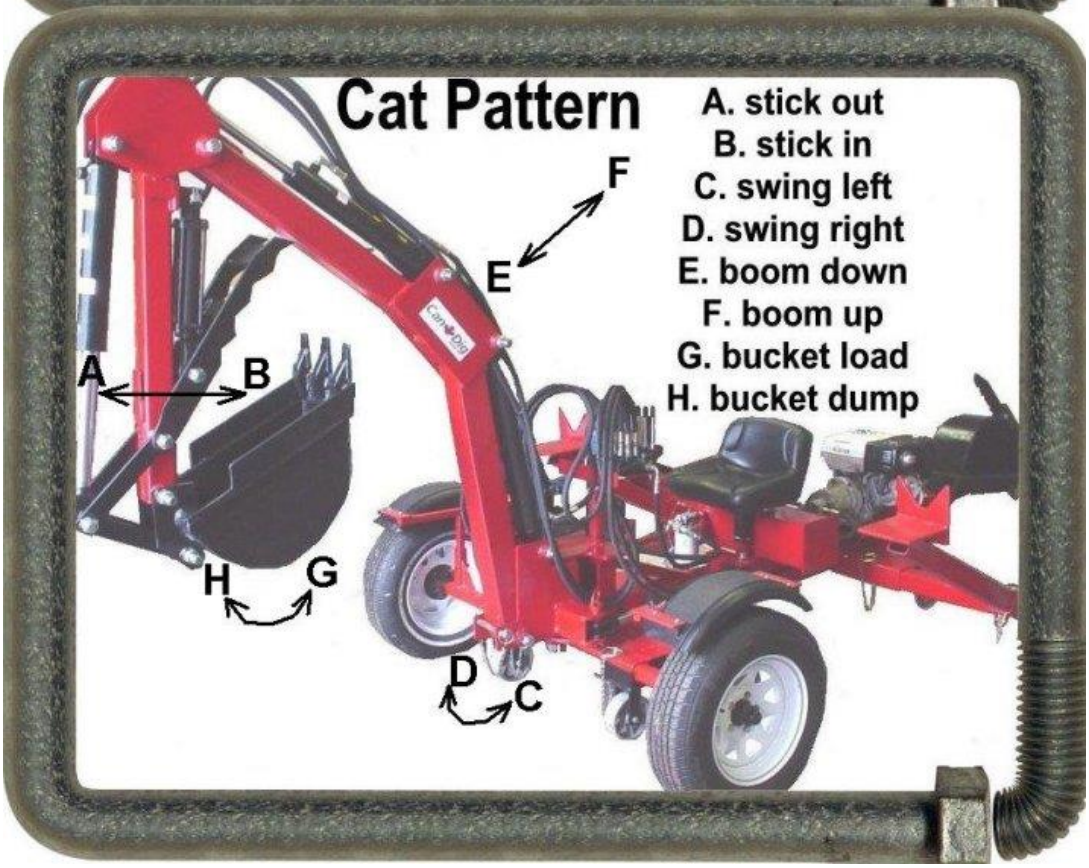
Cat Pattern
A. stick out
B. stick in
C. swing left
D. swing right
E. boom down
F. boom up
G. bucket load
H. bucket dump
F
E
A
B
H
G
D
C

| CD21 Hose Lengths | Front mounted valve (inches) | Joystick valves (inches) |
|---|---|---|
| Bucket - longest | 144 | 166 |
| Bucket - shortest | 127 | 160 |
| Extension - longest | 100 | 128 |
| Extension - shortest | 86 | 106 |
| Boom - longest | 65 | 86 |
| Boom - shortest | 25 | 59 |
| Swing - longest | 36 | 21 |
| Swing - shortest | 25 | 17 |
| thumb - longest | 144 | 165 |
| thumb - shortest | 127 | 148 |
| auger to valve (both) | 127 | 148 |
| Auger to motor (both) | 65 | 65 |
| Notes: All hoses are double wire. Only the auger | | |
| hoses are 3/8 inch; all others are 1/4 inch. | | |

# Trouble Shooting

| Symptom | Solution |
|---|---|
| won't start | 1. need gas?<br>2. if your excavator is equipped with quick connects, located on the return line between the valve and pump, be sure that they are firmly connected.<br>If you have tried to start the engine without the quick connects firmly secured, then disconnect them, reach inside the female part with a flat faced punch, and gently tap the center point to dislodge it so that it can be connected firmly to the male portion.<br>3. The 13 hp Hondas are equipped with an oil alert system that shuts down spark to the engine when the oil is even slightly low. Fill with 30 weight oil until it shows full on the dip stick.<br>4. If the engine is off, and is tilted so that gas can run into the oil, it can make starting difficult of impossible. If that happens, drain the oil and replace it with clean oil. Also to prevent this, always shut the fuel supply off when the engine is turned off, especially when towing it on the highway. |
| Loss of power, or jerky, | 1. be sure there is enough hydraulic fluid (filled |

| | |
|---|---|
| or hydraulics don't work | to slightly above the mid point of the strainer).<br>2. be sure the excavator is not leaning so much to the right that the hydraulic fluid cannot circulate out from the tank to the pump. |
| starts, but stalls under load. | 1. although unlikely, the system pressure may need adjusting. To do this, start at the valve (where the control levers are). Loosen the ½ inch nut which is located on the left hand side of the valve, then use an allan wrench to adjust the system pressure. With the engine running, start by dialing it about ½ turn counterclockwise, then check to see how it responds. Continue adjusting until the excavator can use any lever under full pressure without stalling the engine. Tighten the lock nut. Important: When you receive your excavator, the system pressure has been pre-set to 2100 psi. By dialing up the pressure, premature pump failure can result. |
| Excavator controls are "jumpy". | To smooth out the action of the controls, you can "feather" lightly on the valve lever to prevent it from "jumping". Also, operating at a slightly lower throttle speed will smooth out the controls. |
| clattering noise from pump area | 1. the rubber spider located between the coupler assembly<br>between the pump and engine may have failed. Replace rubber spider. |
| boom cannot be lowered | 1. be sure the one inch safety pin is not still pinned under<br>the boom.<br>2. be sure the flow restrictor is not fully closed. (on pre-2012 models only, and is located on the boom cylinder) |
| cylinder rod bent | 1. replace cylinder rod and replace seals. The factory (or<br>most hydraulic stores) can supply these parts. |
| squeaking | 1. grease all grease nipples daily to prevent wear. |
| Boom sways from side to side when being towed on the highway. | 1. be sure the excavator has it's hydraulic fluid installed, and the cylinders bled to remove the air.<br>2. be sure tongue is securely bolted to the |

trailer coupler and excavator.

3. be sure you choose to pin the axles so that the wheels are located as far back as possible towards the digging end.
4. remove bucket and/or thumb if traveling long distances since that will provide you with more tongue weight. It will also prevent the bucket from acting as a "sail" in the wind at the back of the excavator while it is towed.
5. Some models have allowance on the tow bar to carry the extra bucket which acts to provide more tongue weight and provide greater stability when towing. If you do not have an extra bucket, then your excavator will have a shorter tow bar that has counterweight built onto it.

# Parts List

| | **CD11** | **CD21** |
|---|---|---|
| Honda Engine | 5.5 Horse Power (GX160) | 9 Horse Power (GX270) |
| Valve<br><br>Note: Various vales are shown. Choose the one that meets your needs. | Four lever style:Hy-Spec (HYS 04P40-1A1A1A1A1-SKZ1)<br><br>Two lever style:Hy-Spec (HYS 02P40-A1A1-SKZ1)<br><br>One lever style:Hy-Spec (HYS 01P40-A1-SKZ1)<br><br>Five lever style:Hy-Spec (HYS 05P40-1A1A1A1A1A1-SKZ1)<br><br>Six lever style:Hy-Spec (HYS 06P40-1A1A1A1A1A1A1-SKZ1) | Four lever style:Hy-Spec (HYS 04P40-1A1A1A1A1-SKZ1)<br><br>Two lever style:Hy-Spec (HYS 02P40-A1A1-SKZ1)<br><br>One lever style:Hy-Spec (HYS 01P40-A1-SKZ1)<br><br>Five lever style:Hy-Spec (HYS 05P40-1A1A1A1A1A1-SKZ1)<br><br>Six lever style:Hy-Spec (HYS 06P40-1A1A1A1A1A1A1-SKZ1) |

| | | |
|---|---|---|
| Pump | Haldex (4 gpm) | Eaton part number 26001-RZG Model description: GR Pump (BQR-DIST) (6 gpm) |
| Cylinders (note that if using hydraulic stabilizers, add 2 x 2 ½" x 12" cylinders; thumb is 2 ½" x 8"<br><br>Supplied by Kinecor in Surrey, B.C. | Swing = HYS 25MAL08-10<br><br>Boom = HYS 25MAL12-10<br><br>Extension = HYS 25MAL10-10<br><br>Bucket = HYS 20MAL14-10 | Swing = HYS 25MAL14-10<br><br>Extension and bucket = HYS 25MAL16-10<br><br>Boom = HYS 25MAL20-10 |
| Hydraulic filter | (standard 1" threaded size; any brand) Your excavator comes with "Donaldson" P551551 | (standard 1" threaded size; any brand) Your excavator comes with "Donaldson" P551551 |
| Flexible Couplings (holds the pump to the engine) | 1x ½" bore size; 1 x ¾" bore size; 1x rubber spider | 1x 5/8" bore size; 1 x 1" bore size; 1x rubber spider |
| Steel Pins | 7 x ½" x 4 ½" pins and 1 4 ¼" pin for swing cylinder, 1 (or 2) x 1" x 6 ¼" pins for safety pin under boom, and to hold spare bucket onto tongue. | 7 x ½" x 4 ½" pins and 1 4 ¼" pin for swing cylinder, 1 (or 2) x 1" x 6 ¼" pins for safety pin under boom, and to hold spare bucket onto tongue. |
| Bolts<br><br>1" grade 8 | Various lengths, used to hold ends of cylinders, and for joints at pivot points. | Various lengths, used to hold ends of cylinders, and for joints at pivot points. |
| Hubs | 2 x 5 hole on 4 ½" centers; high speed | 2 x 5 hole on 4 ½" centers; high speed |
| Grease nipples | 1/8" | 1/8" |
| Trailer coupler | 2" x 2" | 2" x 2" |

## Agent

As a new owner of a CanDig mini excavator, you become an agent for the company automatically. Whenever a new sale is made, it is often determined that the sale is a result of an existing CanDig owner taking his/her time to share with the new customer. When you successfully refer a customer, you are paid a commission of $500 credit that can be applied to any CanDig products. For your convenience, and as an alternative, we always try to determine if a sale is a result of a referral, then ensure that the CanDig owner is paid for his/her effort and thoughtfulness. (Sometimes commissions are split if a new buyer speaks with more than one CanDig owner.)

# Disclaimer

CanDig mini excavators are powerful pieces of equipment. They need to be treated with extreme caution at all times and only qualified equipment operators should attempt to use CanDig. Operators of this equipment must accept all liability responsibility including safety and compliance with provisions of any laws or acts. In no event shall CanDig Mini Excavators Inc., or any of its dealers be liable and

any legal actions brought against CanDig Mini Excavators Inc. shall be tried at Kamloops in the province of British Columbia, Canada. CanDig Mini Excavators Inc. and/or its dealers shall in no event be liable for death, injuries to persons or property or incidental, contingent, special or consequential damages arising from the use of their products. For international customers, please check with your local authorities to be sure that the travel lights, trailer coupler, fenders, etc. comply with your local requirements, and make any required changes.

## Warranty:

CanDig guarantees the structure of the unit to be free of manufacturing defects for one year. One year warranty on hydraulic pump and cylinders, from manufacturer of those components. 2 year factory warranty on the Honda engine, from Honda. (Honda warrantee valid only in Canada)

# Call 250-314-0708 for support.

# Operator's Training Guide

**Overview**

Upon successful completion of this program, the Operator will be awarded an Operator's certificate which demonstrates that he/she can assemble, tow, service and safely operate a CanDig mini excavator.

Before operating a CanDig, the Operator should read and understand the general Owner's Manual to learn about assembly, towing, operation & safety, and servicing. After successfully completing the exam, the operator will be given a Log Book which credits him/her for practical experience. After operating a CanDig for a minimum of 100 hours, the operator will be awarded an official Certificate of Operation, and his/her name may choose to be included on the CanDig website to assist them with future employment.

## Operator's Written Exam

After the Operator studies the Owner's Manual, he/she will need to score 100% on the written exam before being allowed to operate a CanDig mini excavator. If he/she scores less than 100%, then they should refer to the answers provided to ultimately understand the material covered in the exam. Note that the exam questions only cover a sample of the knowledge required to operate CanDig safely, so the entire Owner's manual needs to be fully read and understood.

Answer yes or no to each of the following questions. You may use the Owner's manual to help you with your answers. When you're finished writing the exam, you can self-check your work by referring to the answers at the back of the manual.

1. Yes___ No___ 30 weight Honda engine oil is recommended to be used with the Honda engine.
2. Yes___ No___ CanDigs should only be re-configured from travel mode to work mode on a level surface, since they have no brakes and could roll away if changed on a slope.
3. Yes___ No___ When on slopes, be sure the digging end is always facing the lower side of the slope.
4. Yes___ No___ The Honda engine runs on gasoline which produce fumes that can cause sickness and death, especially in a confined area.
5. Yes___ No___ Always lower hydraulic attachments (such as the boom/bucket) to the ground before leaving the machine unattended.
6. Yes___ No___ It's okay to drop the boom suddenly to remove stubborn material from the bucket.
7. Yes___ No___ Before operating CanDig, remember to remove the 1 inch safety travel pin from below the boom.
8. Yes___ No___ It is not necessary to lower the vertical tongue support post before changing the excavator from travel mode to work mode, or visa versa.
9. Yes___ No___ All CanDigs now have multi-positioning options for stabilizer arms and axles to provide more options on uneven ground.
10. Yes___ No___ The wheel axles, when positioned for towing should be facing towards the digging end to provide safe tongue support for towing.
11. Yes___ No___ When the wheel axles are positioned at the towing end (for digging), they can be positioned either facing up, down or back towards the tow end, depending on ground slope it's working on.
12. Yes___ No___ There are grease nipples to be greased at least once daily.
13. Yes___ No___ Change the hydraulic filter (Donaldson P551551, or equivalent) after about 20 hours for the first time, then once or twice annually.

14. Yes___ No___ In temperate climates, it is recommended that you store your excavator for winter months as follows: Change the engine oil. Fill the gas tank, including putting some gas stabilizer in your gas tank in order to prevent condensation from building up in the tank during the winter. Next, start the engine and shut the gas supply line off so that the lines are left clear. Run the engine until all the gas in the line is used up. Cover your excavator so that it is protected from the elements.
15. Yes___ No___ Use a 2 inch trailer ball to tow on highway. For helicopter transport, the ideal straps lengths are 2 x 10 feet (attached around the back axles while in the working mode); and 1 x 5 feet (attached around the top elbow of the boom/extension).
16. Yes___ No___ To move forward, reach out with the boom extension, place the bucket on the ground, teeth facing forwards, and lift the stabilizer legs off the ground. Use the boom extension control to move the excavator forward, then gently allow the boom to be raised. Repeat this process over and over until you have moved forward to where you need to be.
17. Yes___ No___ When traveling on extreme slopes, always be ready to pull the boom lever towards you if the excavator becomes unstable. This will allow the stabilizer legs to grab the ground, providing the safest stability.
18. Yes___ No___ When digging, if you have too big of a bite into the earth, or if there is too much resistance, allow the boom to lower slightly or angle the teeth so that they are cutting into the earth better.
19. Yes___ No___ It is safest to swing a loaded bucket towards the lower side of a slope.
20. Yes___ No___ If you need to dig a trench deeper, you can re-position the excavator forward over what you've already dug, so that you are digging more directly underneath.
21. Yes___ No___ Backfilling is best done by using the bucket to sweep the ground back into the trench.
22. Yes___ No___ The correct amount of hydraulic fluid is when it is filled to slightly above the mid point of the strainer).
23. Yes___ No___ The CD21 and "Mining CD21" both operate using the following pump: Eaton part number 26001-RZG Model description: GR Pump (BQR-DIST) (6 gpm)
24. Yes___ No___ The CD21 and "Mining CD21" both use about 2 gallons of unmixed gas during an 8 hour shift.
25. Yes___ No___ You can earn $500 credit by successfully referring another customer to invest in their own CanDig mini excavator.

# Answers:

1. Yes_X_ No___
2. Yes _X_ No___
3. Yes___ No_X_ The digging end needs to be on the UPPER side so the excavator remains stable.
4. Yes_X_ No___
5. Yes_X_ No___
6. Yes___ No_X_Dropping the boom may cause the operator to be jolted out of his seat.
7. Yes_X_ No___
8. Yes___ No_X_The vertical tongue support MUST be lowered so the excavator can be changed from travel mode to work mode, and visa versa.
9. Yes_X_ No___
10. Yes_X_ No___
11. Yes_X_ No___
12. Yes_X_ No___
13. Yes_X_ No___
14. Yes_X_ No___
15. Yes_X_ No___
16. Yes_X_ No___
17. Yes_X_ No___
18. Yes___ No_X_The boom should be RAISED slightly if too much resistance is experienced while digging.
19. Yes___ No_X_Always choose to swing a loaded bucket to the upper side of the slope since it is more stable to do so, and less likely to tip the excavator over.
20. Yes_X_ No___
21. Yes___ No_X_ Backfilling is best done by digging the loose dirt, lifting it, and swinging it into the hole. It is okay to use the bucket to sweep the small remaining bit of ground, but do not rely on this sort of action since it is will cause premature wear of the bushings at the joints.
22. Yes_X_ No___
23. Yes_X_ No___
24. Yes_X_ No___
25. Yes_X_ No___

## Operator's Log Book

This Log Book is the official record of the CanDig Training issued by CanDig Inc., and monitored by the company who owns the CanDig mini excavator; and approved by Gordon Leschyson (President of CanDig Inc.).

Company Name: _____

Operator's Name: _____

Date of Issue: _____

**Use of Log Book**

**Operators**, this Log Book is the official record of your operator's training, practical work experience, and demonstrated understanding of the safety procedures expected to operate a CanDig safely. You are responsible for:

1. Getting it endorsed by your employer/s;
2. Producing it when required.

Please note that your Log Book is the only record of your CanDig operator's experience, so take care of it. As an added precaution, you should photocopy the experience endorsement pages and keep them in a safe place. Once the Operator demonstrates at 100% comprehension of the written exam, and has completed a minimum of 100 hours of practical operation of a CanDig mini excavator, then he/she will be awarded an Operator's Certificate. That certificate should be registered with CanDig Inc. by your employer so that your name can be posted on the CanDig website (www.candig.com), showing you are a qualified CanDig operator. If you provide your contact information, CanDig Inc. will list you under the "employment" section so you can get future calls from potential Employers.

**Employers**, this Log Book documents the Operator's:

1. Practical work experience. You must complete the experience endorsement in this book when requested by the Operator and especially when the Operator leaves your employ. To register a new operator on the CanDig website, the Employer should email the Operator's name, address and phone number to sales@candig.com.

**Employment Record**

To be completed and signed by employer's representative

Employer: Name/Address_____

_____

Date: From y/m/d to y/m/d

From: _____ to _____

Total number of hours worked _____

Description of work performed by the Operator.

_____
_____
_____
_____

Employer's representative Name _____ and signature
_____

XXXXXXXXXXXXXXXXXXXXXXXXXXXXXXXXXXXXXXXXXXXXXXXXXXXXXXXXXXXXXXXXXXXXXXXXXXXXXX

Employer: Name/Address_____

_____

Date: From y/m/d to y/m/d

From: _____ to _____

Total number of hours worked _____

Description of work performed by the Operator.

_____
_____
_____
_____

Employer's representative Name _____ and signature
_____

XXXXXXXXXXXXXXXXXXXXXXXXXXXXXXXXXXXXXXXXXXXXXXXXXXXXXXXXXXXXXXXXXXXXXXXXXXXXXX

Employer: Name/Address_____

____________________________________________________________

Date: From y/m/d to y/m/d

From: ____________________ to ____________________

Total number of hours worked _____________

Description of work performed by the Operator.

____________________________________________________________________________

____________________________________________________________________________

____________________________________________________________________________

___________________

Employer’s representative Name __________________ and signature

______________________

XXXXXXXXXXXXXXXXXXXXXXXXXXXXXXXXXXXXXXXXXXXXXXXXXXXXXXXXXXXXXXXXXXXXXXXXXXX
XXXXXX

# Certificate of Operation

This certifies that

_____

Has successfully completed the requirements for the

## CanDig Operator's Certificate

Date _____

Authorized by